Antenna-coupled Microbolometers

- DC Analog of HEB
- Planar linear array with metallization
- Easy to integrate SQUIDs

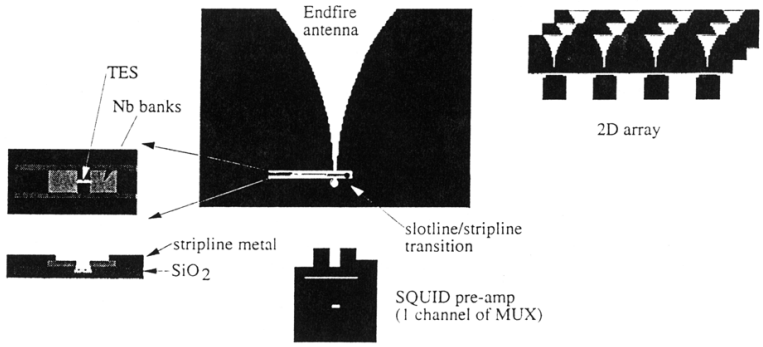

Fig. 7 A schematic of a TES coupled to our proposed antenna structure

Planar Hybrid Bolometer (PHyB) Arrays

Similar to CEA SPIRE concept

- Truly compact; many pixels
- Nearly-filled focal plane
- Technologies:
  - DRIE Bolometers
  - MEMS backshorts
  - Through-wafer SC vias
  - Efficient absorber
  - Integration/bump bonding

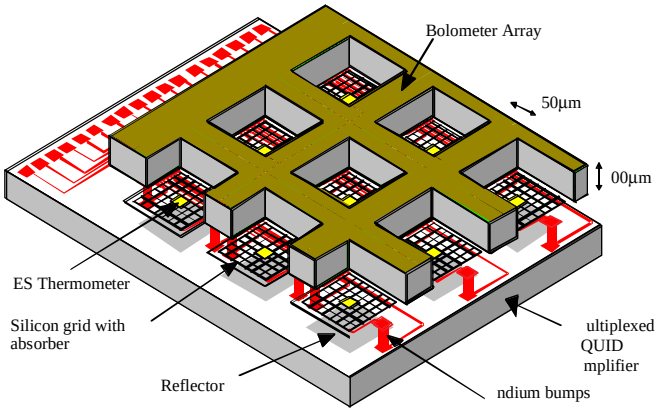

Prototype PHyB Array

- Keep technology developments separated
  - DRIE Bolometers
  - Efficient absorber
  - Bump bonding

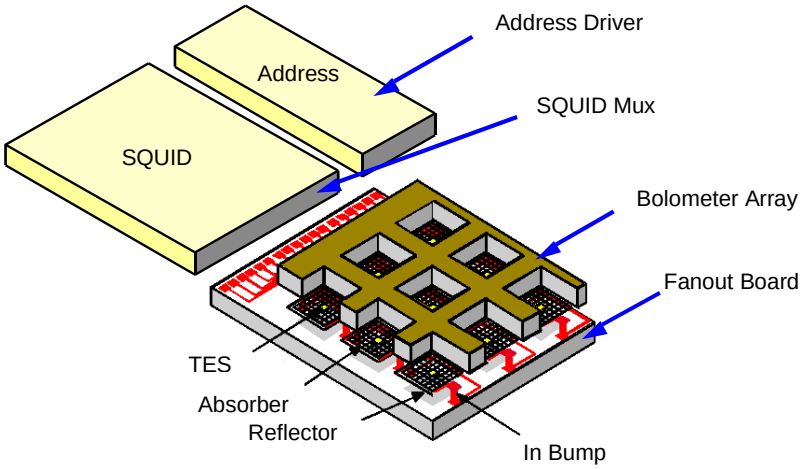
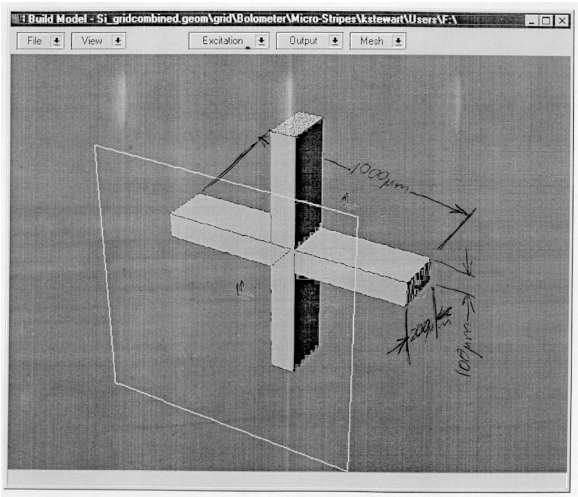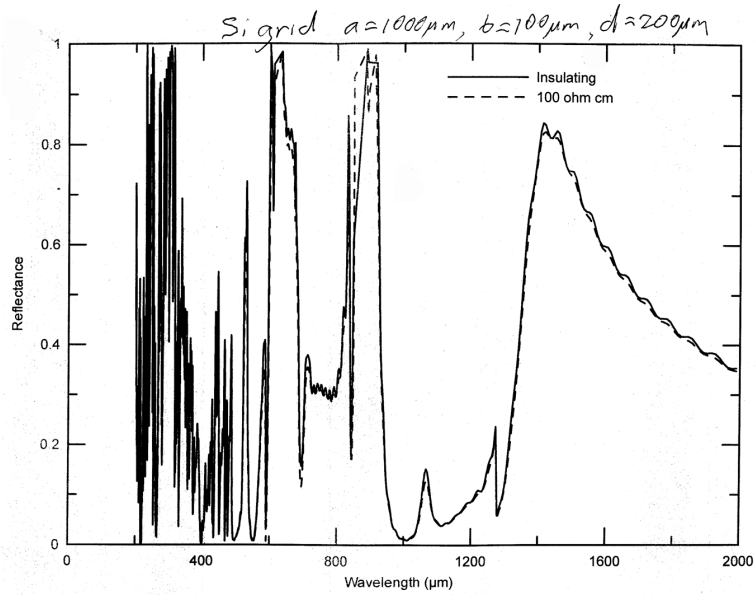
Problems with PHyB Array